Document No.	QR4-700-T-003
REV.	A/0

REV.	DESCRIPTION	REVISOR	DATE	APPROVED
0		LH.Mao	11.18.2016	David

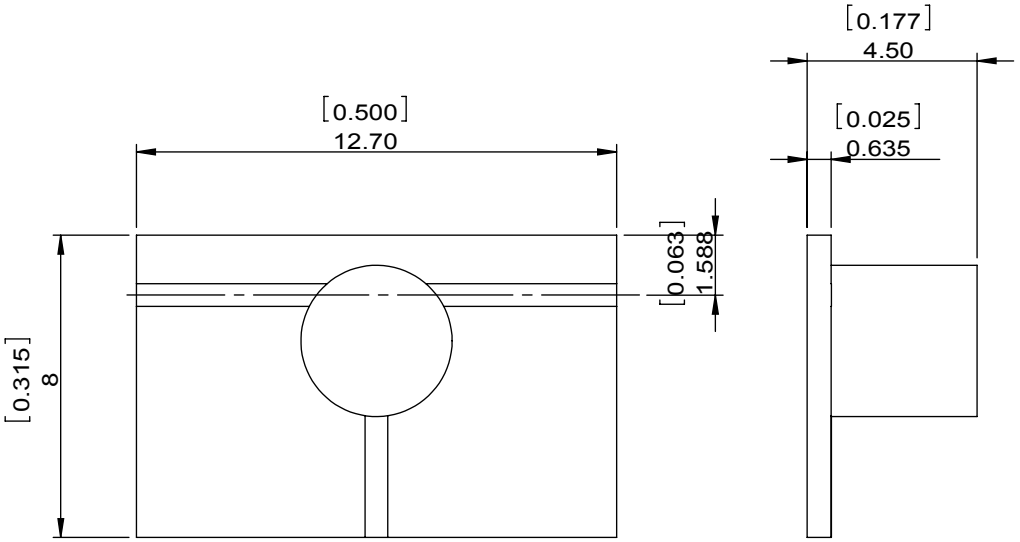

SPECIFICATIONS	
Part's Number	3CMM65-3
Frequency(GHz)	5.80-7.20
Direction	CW
Insertion Loss(dB)MAX	0.5
Insertion Loss Ripple	
Isolation(dB)MIN	20
Return Loss(dB)MIN	20.08
3rd IMD(dBc)MAX	
Power FWD/REV/PK(Watt)	5/5/-
Operating Temperature(°C)	-30~+70
Storage Temperature(°C)	
2nd/3rd Harmonic(dBc)	
Termination/Attenuator(Watt/dB)	5
Tab(W×LG×THK)(mm[Inch])	
Additional Notes	GWB

DORADO Millimeter Corp

MATERIAL:

SURFACE TREATMENT:

DWG NO: 3CMM65-3

DWG BY:	LH.Mao	11.18.2016	SCALE
CHK'D BY:			5:1
APPV'D BY:			
Unit: mm[inch]	Tolerance: Liner: ±0.25 Anguar: ±0.5°	The First:	A4

DESCRIPTION: MICROSTRIP CIRCULATOR

RoHS COMPLIANCE

This document is the property of DORADO Millimeter Corp.
It cannot be copied, duplicated, used for manufacturing purposes
or communicated to third party as a whole or partly,
without the written consent of DORADO Millimeter Corp.

WEIGHT:

SHEET 1 OF 1