Document No.	QR4-700-T-003
REV.	A/0

REV.	DESCRIPTION	REVISOR	DATE	APPROVED
0		LH.Mao	03.22.2017	David

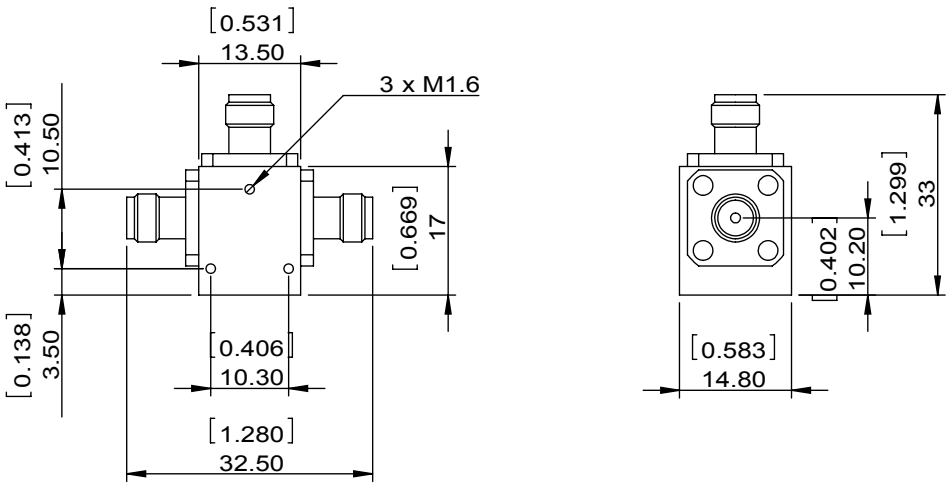

SPECIFICATIONS	
Part's Number	3ICC85-1
Frequency(GHz)	8.40~8.50
Direction	CW
Insertion Loss(dB) TYP/MAX	0.25/0.3
Insertion Loss Ripple	
Isolation(dB) TYP/MIN	23/20
Return Loss(dB) TYP/MIN	23.13/19.08
3rd IMD(dBc)MAX	
Power FWD/REV/PK(Watt)	1/1/-
Operating Temperature(°C)	-196/+15 to +35
Storage Temperature(°C)	
2nd/3rd Harmonic(dBc)	
Termination/Attenuator(Watt/dB)	1
Tab(W×LG×THK)(mm[Inch])	
Additional Notes	GWB

DORADO INTERNATIONAL **DORADO Millimeter Wave**

MATERIAL:

SURFACE TREATMENT:

DWG NO: 3ICC85-1

DWG BY:	LH.Mao	03.22.2017	SCALE
CHK'D BY:			1:1
APPV'D BY:			
Unit: mm[inch]	Tolerance: Liner: ±0.25 Anguar: ±0.5°	The First:	A4

DESCRIPTION: Cryogenic Isolator

RoHS COMPLIANCE

This document is the property of DORADO Millimeter Wave.
It cannot be copied, duplicated, used for manufacturing purposes
or communicated to third party as a whole or partly,
without the written consent of DORADO Millimeter Wave.

WEIGHT:

SHEET 1 OF 1