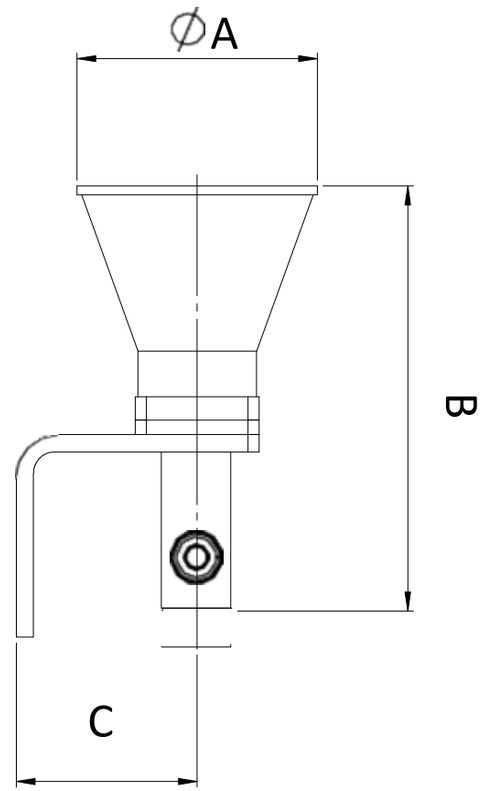
∅A
B
C