Document No.	QR4-700-T-003
REV.	A/0

REV.	DESCRIPTION	REVISOR	DATE	APPROVED
0		LH.Mao	10.13.2017	David

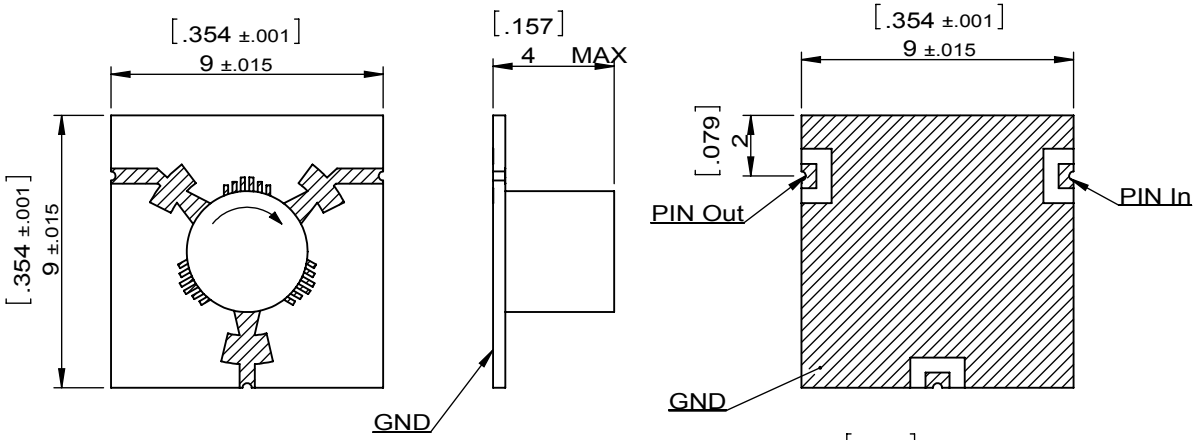

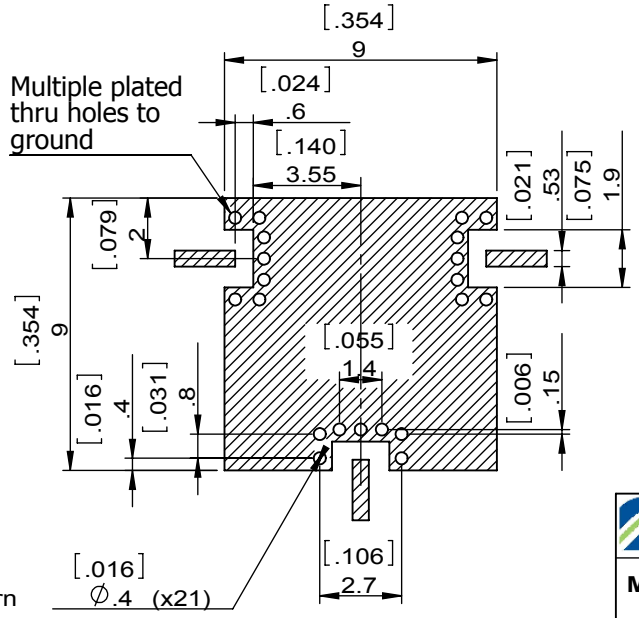

SPECIFICATIONS	
Part's Number	2CMSM-9.5-2T-10BW10
Frequency(GHz)	9.500~10.500
Direction	CW
Insertion Loss(dB)MAX	0.5
Isolation(dB)MIN	19.0
Return Loss(dB)MIN	17.7
3rd IMD(dBc)MAX	-
Power FWD/REV/PK(Watt)	8/8/-
Operating Temperature(°C)	-40~+70
Storage Temperature(°C)	130 MAX
2nd/3rd Harmonic(dBc)	-
Termination/Attenuator(Watt/dB)	-
Tab(W×LG×THK)(mm[Inch])	-
Additional Notes	-

NOTES:
1. The devices should be mounted on the NON MAGENTIC carrier or base.
2. For Pb-free reflow profile with peak temperature 250°C @40 second.
3. Humidity 5 to 95% non-condensing.
4. Recommended configuration of land pattern on "PCB for 2CMSM-9.5-2T-10BW10".

PCB FOR 2CMSM-9.5-2T-10BW10
Material:Getec ML200D
0.254±0.001 THICK 1/2 OZ CU CLAD

RoHS COMPLIANCE

This document is the property of DORADO Millimeter Wave.
It cannot be copied, duplicated, used for manufacturing purposes or communicated to third party as a whole or partly, without the written consent of DORADO Millimeter Wave.

DORADO INTERNATIONAL **DORADO Millimeter Wave**

MATERIAL: -	**DWG NO:** 2CMSM-9.5-2T-10BW10			
SURFACE TREATMENT: -	DWG BY:	LH.Mao	10.13.2017	SCALE
	CHK'D BY:			4:1
DESCRIPTION: Surface Mount Circulator	APPV'D BY:			
	Unit: mm[inch]	Tolerance: Liner: ±0.25 Anguar: ±0.5°	The First:	A4

WEIGHT:

SHEET 1 OF 1